BALTIMORE
AIRCOIL COMPANY

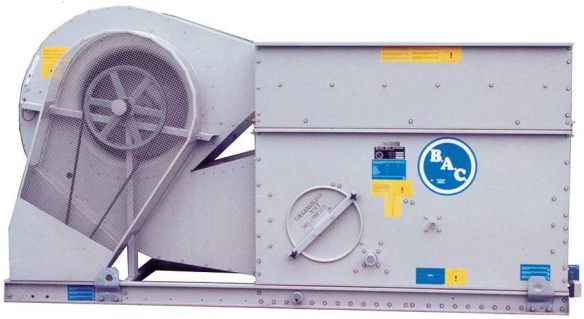

VTL-E Open Cooling Towers

RIGGING AND INSTALLATION INSTRUCTIONS

About Rigging and Installation

The BAC equipment should be rigged and installed as outlined in this bulletin.
These procedures should be thoroughly reviewed prior to the rigging and operation to acquaint all personnel with the procedures to be followed and to assure that all necessary equipment will be available at the jobsite.
Be sure to have a copy of the unit certified drawing available for reference. If you do not have a copy of this drawing or if you need additional information about this unit, contact the local BAC Balticare representative. His name and phone number can be found on the BAC website: www.BaltimoreAircoil.eu. The model type and serial number of your equipment are indicated on the unit nameplate.

Recommended Maintenance and Monitoring Programme

Checks and Adjustments	Start-Up	Weekly	Monthly	Quarterly	Every 6 Months	Annually	Shutdown
Cold Water Basin & strainer	X			X			
Operating level and make-up	X		X				
Blow down	X		X				
Sump heater package	X				X		
Belt tension	X		X				
Drive alignment	X					X	
Locking Collar	X				X		
Rotation of fan(s) and pump(s)	X						
Motor voltage and current	X					X	
Unusual noise and/or vibration	X		X				

Inspections and Monitoring	Start-Up	Weekly	Monthly	Quarterly	Every 6 Months	Annually	Shutdown
General condition	X		X				
Heat transfer section	X				X		
Drift eliminators	X				X		
Water distribution	X				X		
Fan shaft	X			X			
Fan Motor	X			X			
Electric Water Level Control Package (optional)	X				X		
TAB test (dip slides)	X	X					
Circulating water quality	X		X				
System overview	X					X	
Record keeping	as per event						

Lubrication	Start-Up	Weekly	Monthly	Quarterly	Every 6 Months	Annually	Shutdown
Fan shaft bearings	X				X		X
Motor bearings*	X				X		
Adjustable motor base	X				X		X

* only for motors with grease fittings with typical frame size > 200L (>30 KW)

Cleaning procedures	Start-Up	Weekly	Monthly	Quarterly	Every 6 Months	Annually	Shutdown
Mechanical cleaning	X					X	X
Disinfection**	(X)					(X)	(X)
Drain Basin							X

** depends on applied code of practice

Notes

1. Water Treatment and auxiliary equipment integrated in the cooling system may require additions to the table above. Contact suppliers for recommended actions and their required frequency.
2. Recommended service intervals are for typical installations. Different environmental conditions may dictate more frequent servicing.
3. When operating in ambient temperatures below freezing, the unit should be inspected more frequently (see Cold Weather Operations in the appropriate Operating and Maintenance Instructions).
4. For units with Belt Drive, tension on new belts must be readjusted after the first 24 hours of operation and monthly thereafter.

Table of Contents

RIGGING AND INSTALLATION INSTRUCTIONS

1	**General Information**	**5**
	About Engineering and Application Practices	5
	Shipping	5
	Inspection Before Rigging	5
	Unit Weights	7
	Anchoring	7
	Leveling	7
	Electrical connections	8
	Connecting Pipework	8
	Freeze Protection	8
	Bleed Line Installation	8
	Safety Precautions	8
	Non-walking Surfaces	10
	Modifications by others	10
	Warranty	10
2	**Rigging**	**11**
	General Notes	11
	Rigging Method Discharge Accessories	13
3	**Optional Accessories Assembly**	**14**
	General Information	14
	Clean Out Port	16
4	**Inspection Prior to Start-up**	**17**
	General	17
5	**Further Assistance & Information**	**18**
	Balticare	18
	More Information	18

1 VTL-E GENERAL INFORMATION

About Engineering and Application Practices

This bulletin only refers to the assembly of the unit. To ensure a proper operation, a correct integration of the unit in the overall installation is mandatory. For good engineering and application practices on layout, levelling, connecting pipework, etc., please refer to our website:
http://www.baltimoreaircoil.eu/knowledge-center/application-information.

Shipping

BAC cooling equipment is factory assembled to assure uniform quality and minimum field assembly.
The models are shipped in one single section.
For the dimensions and weights of a specific unit or section, refer to the certified drawing.

CAUTION

Do not cover units with PVC eliminators or fill with a plastic tarpaulin. Temperature increase due to sun radiation could deform the fill or eliminators

Inspection Before Rigging

When the unit is delivered to the jobsite, it should be checked thoroughly to ensure all required items have been received and are free of any shipping damage prior to signing the bill of lading.
The following parts should be inspected:

- Sheaves and belts
- Bearings
- Bearing supports
- Fan motors
- Fan wheels and shafts
- Wet deck surface
- Water distribution system
- Strainers
- Float valve assembly
- Eliminators
- Interior surfaces
- Exterior surfaces
- Miscellaneous items

An envelope with check-list is stored in a wooden no nail crate or a plastic container which is placed in the lower section. For safety reasons, access doors / panels may be sealed with bolts. The following table specifies which wrench is required to open them.

Wrench to open access door
17 mm

Required wrench to open access door

The wooden no nail crate / plastic container also contains miscellaneous parts such as gasket, hardware and accessory items.
At temperatures below -10°C the butyl sealer tape might loose it's flexibility. We recommend to store the sealer tape in a heated room before using it during rigging at freezing temperatures.

CAUTION

Be sure to remove all miscellaneous items from the pan before the unit is assembled.

The hardware is packed in a plastic container and located inside the lower section of the unit.
If a plastic container is used; it will be fixed to the make-up valve using a cable tie.

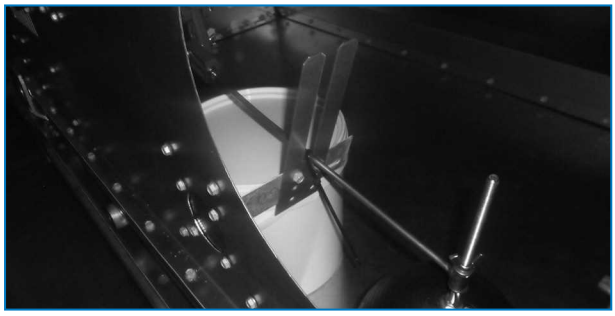

Hardware Location

If heaters are shipped loose, they will be wrapped in plastic and fixed to the strainer.

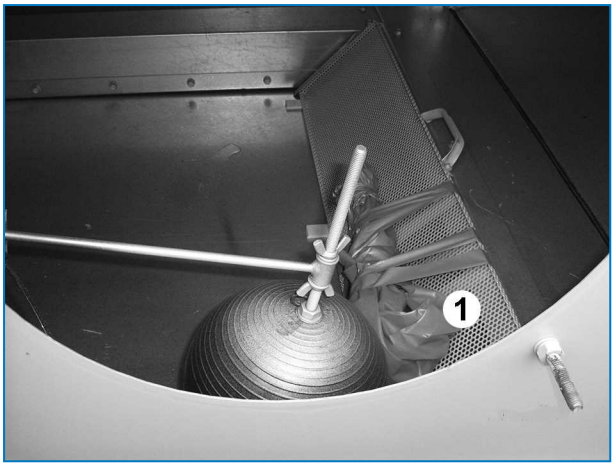

Heater Location if shipped loose.

1. Heater

Unit Weights

Before rigging any BAC equipment, the weight of each section should be verified on the unit certified drawing.

These weights are **approximate** and should be confirmed by weighing **before lifting** when available hoisting capacity provides little margin for safety.

CAUTION

Before an actual lift is undertaken, ensure no water, snow, ice or debris has collected IN THE SUMP OR ELSEWHERE in THE UNIT. such accumulations will add substantially to the equipment's lifting weight.

In the event of extended lifts or where hazards exist, the lifting devices should be used in conjunction with safety slings placed under the unit.

Anchoring

The unit must be properly anchored in place.
Refer to the suggested support details on the certified drawing for locations of the mounting holes. Anchor bolts must be provided by others.
Holes suitable for 20 mm bolts are provided in the bottom flange of the lower section for bolting the unit to the support beams.

Leveling

The unit must be level for proper operation and ease of piping.
Support beams must also be level as shims should not be used between pan and support beams to level the unit.

Electrical connections

Connecting Pipework

All piping external to BAC cooling equipment must be supported separately.
In case the equipment is installed on vibration rails or springs, the piping must contain compensators to eliminate vibrations carried through the external pipework.
Suction pipe sizing should be done according to good practice, which may for larger flows require larger pipe diameters than the outlet connection. In such cases adapter pieces need to be installed.

Freeze Protection

These products must be protected against damage and/or reduced effectiveness due to possible freeze-up by mechanical and operational methods. Please refer to the BAC Product & Application Handbook or contact your local BAC Balticare representative for recommended protection alternatives.

Bleed Line Installation

On all open cooling towers, install a bleed line with valve between the system circulating pump discharge riser and a convenient drain. Locate the bleed line in a portion of the riser piping that drains when the pump is off.
The bleed valve should always be open when the unit is in operation, unless the bleed rate is automatically controlled by a water treatment system.

Safety Precautions

All electrical, mechanical and rotating machinery constitutes a potential hazard, particularly for those not familiar with its design, construction and operation. Accordingly, adequate safeguards (including use of protective enclosures where necessary) should be taken with this equipment both to safeguard the public (including minors) from injury and to prevent damage to the equipment, its associated system and the premises.
If there is doubt about safe and proper rigging, installation, operation or maintenance procedures, contact the equipment manufacturer or his representative for advice.
When working on operating equipment, be aware that some parts may have an elevated temperature. Any operations on elevated level have to be executed with extra care to prevent accidents.

AUTHORIZED PERSONNEL

The operation, maintenance and repair of this equipment should be undertaken only by personnel authorized and qualified to do so. All such personnel should be thoroughly familiar with the equipment, the associated systems and controls and the procedures set forth in this and other relevant manuals. Proper care, personal protective equipment, procedures and tools must be used in handling, lifting, installing, operating, maintaining and repairing this equipment to prevent personal injury and/or property damage. Personnel must use personal protective equipment where necessary (gloves, ear plugs, etc...)

MECHANICAL SAFETY

Mechanical safety of the equipment is in accordance with the requirements of the EU machinery directive. Depending upon site conditions it also may be necessary to install items such as bottom screens, ladders, safety cages, stairways, access platforms, handrails and toe boards for the safety and convenience of the authorized service and maintenance personnel.
At no time this equipment should be operated without all fan screens, access panels and access doors in place.
When the equipment is operated with a variable fan speed control device, steps must be taken to avoid operating at or near to the fan's «critical speed».
For more information consult your local BAC Balticare representative.

ELECTRICAL SAFETY

Each motor associated with this equipment should be installed with a lockable disconnect switch located within sight of the equipment. No service work should be performed on or near the fans, motor, drives or inside the equipment unless motors, heaters etc. are electrically isolated.

LIFTING

CAUTION

Failure to use designated lifting points can result in a dropped load causing severe injury, death and/or property damage. Lifts must be performed by qualified riggers following BAC published Rigging Instructions and generally accepted lifting practices. The use of supplemental safety slings may also be required if the lift circumstances warrant its use, as determined by the rigging contractor.

LOCATION

All cooling equipment should be located as far away as possible from occupied areas, open windows or air intakes to buildings.

CAUTION

Each unit must be located and positioned to prevent the introduction of discharge air into the ventilation systems of the building on which the unit is located and of adjacent buildings.

For detailed recommendations on BAC equipment layout, please see the BAC Application Handbook EU-Edition, the BAC website: www.baltimoreaircoil.eu or contact your local BAC-Balticare Representative.

LOCAL REGULATIONS

Installation and operation of cooling equipment may be subject to local regulations, such as establishment of risk analysis. Ensure regulatory requirements are consistently met.

Non-walking Surfaces

Access to and maintenance of any component needs to be performed in accordance with all local applicable laws and regulations. If the proper and required access means are not present, temporary structures need to be foreseen. Under no circumstance can one use parts of the unit, that are not designed as an access mean, unless measures can be taken to mitigate any risks that might occur from doing so.

Modifications by others

Whenever modifications or changes are made by others to the BAC equipment without written permission of BAC, the party who has done the modification becomes responsible for all consequences of this change and BAC declines all liability for the product.

Warranty

BAC will guarantee all products to be free from manufactured defects in materials and workmanship for a period of 24 months from the date of shipment. In the event of any such defect, BAC will repair or provide a replacement. For more details, please refer to the Limitation of Warranties applicable to and in effect at the time of the sale/purchase of these products. You can find these terms and conditions on the reverse side of your order acknowledgement form and your invoice.

2 VTL-E RIGGING

General Notes

1. If the delivery consists of separate sections, do not assemble before lifting, as the lifting devices provided are not designed to support the weight of the entire assembly.

When the unit is installed, all metal parts created by drilling, fastening self tapping screws, grinding, welding or other mechanical works must be removed from the unit. If they remain on the unit (typically on the double break flanges) this could lead to corrosion and eventually coating damage.

2. Spreader bars of the full width of the section must be used between the lifting cables to prevent damage to the section.
3. For extended lifts or where hazards exist, it is recommended to use the lifting devices in conjunction with safety slings placed under the unit.
4. Lifting devices have been provided on all sections. The table below gives the preferred method for rigging each section of a unit.
5. For asymmetrical load distribution shorten the slings at one end so the casing is approximately horizontal.
6. There is a difference in lifting ear and tie down buckle

1. Lifting ear: use this ear to lilft unit (rigging purpose). Do not use ear for lashing.
2. Eyebolt for lashing purpose only. Do not use for lifting the unit

Logo for proper use of tie down buckle & lifting ear

1. Proper use for lifting ear
2. Proper use for tie down buckle/eyebolt

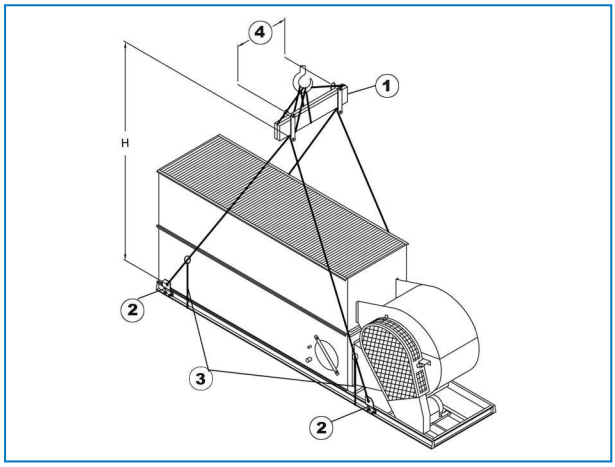

Rigging method units

1. Spreader Bar
2. Lifting Device
3. Safety Slings
4. Spreader Bar Length

Model	Unit L & W (mm)	Min. "H " (mm)	Spreader Bar Length (mm)	Discharge Accessory [1] Minimum "H"
VTL-E-039-G to VTL-E-079-K	3350 x 1250	3100	1250	3100
VTL-E-058-G to VTL-E-117-M	4560 x 1250	4300	1250	4300
VTL-E-070-J to VTL-E-137-M	5480 x 1250	5000	1250	5000
VTL-E-113-J to VTL-E-227-O	4560 x 2400	4300	2450	4300
VTL-E-183-L to VTL-E-272-P	5480 x 2400	5000	2450	5000

[1] Discharge accessories can be: plume abatement coil, positive closure damper, tapered discharge hood, sound attenuation.

Rigging Method Discharge Accessories

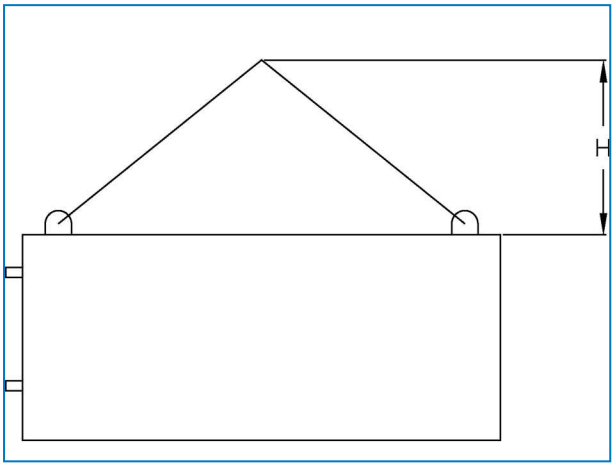

CAUTION

When lowering a section, ensure nothing can be trapped between the upper and lower flanges.

3 VTL-E
OPTIONAL ACCESSORIES ASSEMBLY

General Information

1. Optional discharge accessories such as tapered hoods, positive closure dampers, discharge sound attenuators, desuperheaters, plume abatement coils and/or access plenums can be fitted.
2. Rigging method of optional accessories is indicated in the rigging tables.(see "General Notes" on page 11
3. If the delivery consists of separate sections, do not assemble before lifting, as the lifting devices provided are not designed to support the weight of the entire assembly.
4. Refer to the unit certified drawing for installation sequence of optional accessories.
5. Position the lower section on the supporting steel and bolt in place.
6. Remove any protective wood from the top horizontal flanges of the lower section. Wipe down the flanges to remove dust, dirt or moisture that may have accumulated during shipment and storage.
7. Apply the 25 mm wide tape sealer around the periphery of the top flange of the lower section.
   This tape sealer must be centred directly over the centreline of the tapper holes and on the centreline of the end flanges where there are no tapper holes. The sealer is to be spliced only along the flanges with tapper holes. When it is necessary to splice sealer, mitre and press the two ends together so as to form a smooth, continuous bead. Tape sealer is trapezoidal in shape and must be installed wide side down (see Figure "Installation of tape sealer"). Do not stretch sealer tape.
8. Sealer applied to the end flanges of the unit must be continuous.

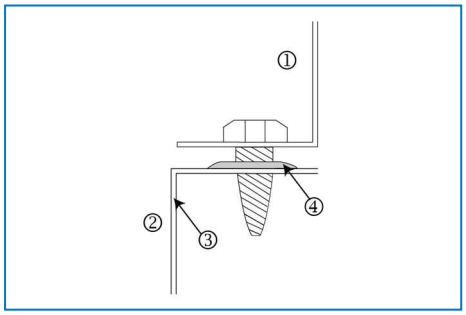

Installation of tape sealer

1. Upper section
2. Lower section
3. Lower section frame
4. 25 mm flat tape sealer laid over punch line wide side down.

When rigging the casing sections one might consider to hang the casing under a small angle (1-2°) in the crane. This way one short end can be positioned first and then the rest of the casing can be lowered slowly.

Once the casing is put on the sealer tape,
it can not be moved any more so gentle positioning is required.

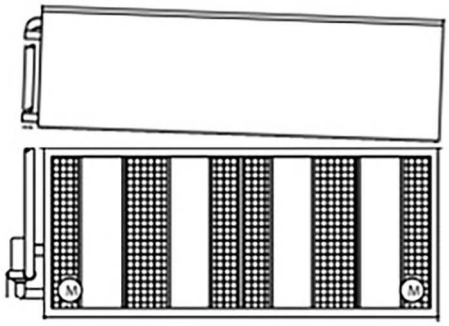

Position the casing at an angle.

9. Remove the skid from the middle section. Lift the middle section and position it over the lower section so that the flanges of the section are about 50 mm above the lower section. Dot not let the section swing and damage the sealer.
   Use at least four drift pins (see figure) in the fastening holes located on the long sides of the sections to align the top section to the bottom section. To avoid incorrect alignment, refer to the below drawing for the position of the fastening holes to be used. Use additional drift pins in the middle of the unit if required, to align long panels. (See Figure "Usage of drift pin to align the screw holes")
   Make sure all holes from upper section and lower section are properly aligned before lowering the top section completely to the bottom section.

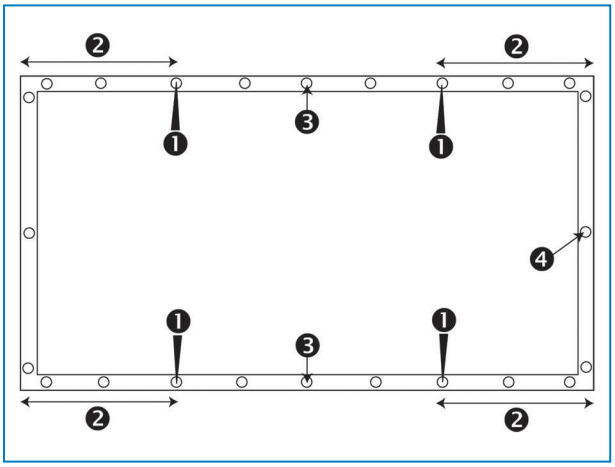

Position of the fastening holes to be used.

1. Drift pin position
2. The distance between the fastening hole in which the drift pin is inserted and the corner should be at least 30cm
3. Usage of additional drift pin for long sides
4. Fastening hole

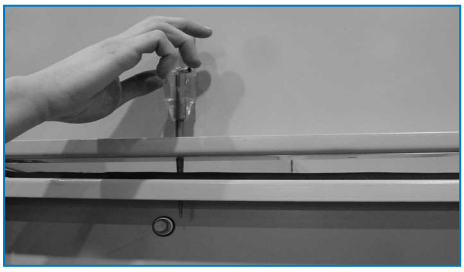

Usage of drift pin to align the screw holes

10. Using the self-tapping screws, drive screws down through the middle section and into the lower section. Start next to lifting ear towards centre of unit. Continue to install the screws using the drift pin to align the screw holes until all holes are filled with screws

CAUTION

Make sure coupling is installed on external piping if delivered with the dry coil.

Clean Out Port

Due to transport width limits, the cover flanges of the clean out port are mounted with flanges towards the inside (1). On site, the cover can be placed with flanges to the outside for easy access to hardware (2).

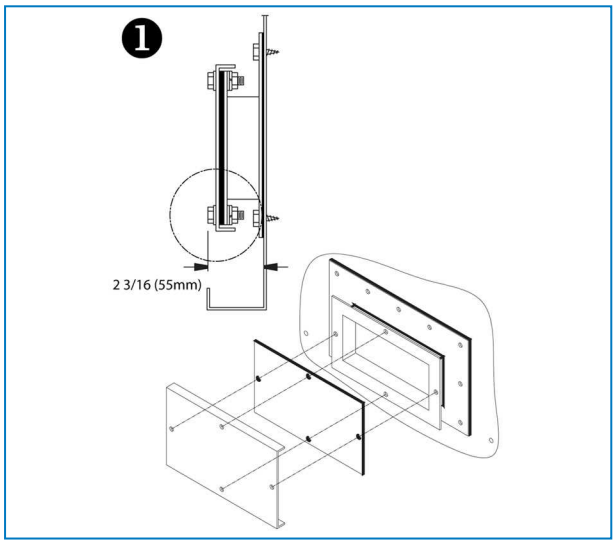

Clean out port cover mounted for transport

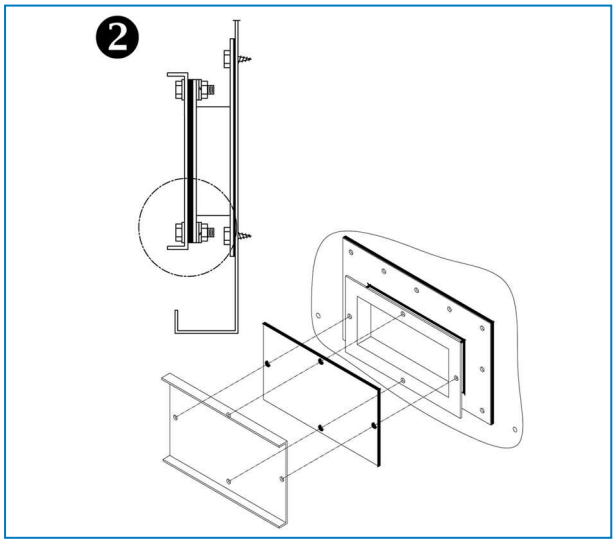

Final installation of clean out port cover

4 VTL-E
INSPECTION PRIOR TO START-UP

General

Prior to start-up, the following services, which are described in detail in the Operating and Maintenance Manual (see Table "Recommended Maintenance and Monitoring Programme" on page 2) must be performed.
Proper start-up procedures and scheduled periodic maintenance will prolong the life of the equipment and ensure trouble-free performance for which the unit is designed.

FURTHER ASSISTANCE & INFORMATION

Balticare

BAC has established a specialized independent total care company called Balticare. The BAC Balticare offering involves all elements required to ensure a safe and efficient operation of your evaporative cooling products. From a full range of risk assessment to selective water treatment, training, testing, record keeping and annual system overview.
For more details, contact BAC Balticare at www.balticare.com or you can also contact your local BAC representative for further information and specific assistance at www.BaltimoreAircoil.eu.

More Information

REFERENCE LITERATURE

- Eurovent 9-5 (6) Recommended Code of Practice to keep your Cooling System efficient and safe. Eurovent/Cecomaf, 2002, 30p.
- Guide des Bonnes Pratiques, Legionella et Tours Aéroréfrigérantes. Ministères de l'Emploi et de la Solidarité, Ministère de l'Economie des Finances et de l'Industrie, Ministère de l'Environnement, Juin 2001, 54p.
- Voorkom Legionellose. Minsterie van de Vlaamse Gemeenschap. December 2002, 77p.
- Legionnaires' Disease. The Control of Legionella Bacteria in Water Systems. Health & Safety Commission. 2000, 62p.
- Hygienische Anforderungen an raumlufttechnische Anlagen. VDI 6022.

INTERESTING WEB SITES

- www.BaltimoreAircoil.eu
- www.Balticare.com
- www.eurovent-certification.com
- www.ewgli.org
- www.ashrae.org
- www.uniclima.org
- www.aicvf.org
- www.hse.gov.uk

COOLING TOWERS

CLOSED CIRCUIT COOLING TOWERS

ICE THERMAL STORAGE

EVAPORATIVE CONDENSERS

HYBRID PRODUCTS

PARTS & SERVICES

BLUE by nature
GREEN at heart

www.BaltimoreAircoil.eu

info@BaltimoreAircoil.eu

www.balticare.com

info@balticare.com

Please refer to our website for local contact details.

Industriepark - Zone A, B-2220 Heist-op-den-Berg, Belgium

© **Baltimore Aircoil International nv**